Week 2: Vector Databases

- A vector database indexes and stores vector embeddings for fast retrieval and similarity search, with capabilities like CRUD operations, metadata filtering, horizontal scaling, and serverless.
- Vector embeddings are the type od vector data representation that carries within it semantic information that's critical for the AI to gain understanding and maintain a long-term memory they can draw upon when executing complex tasks.
- The AI models generate embeddings and have various attributes, which make their representations challenging to manage.
- Challenge in vector databases – traditional scalar-based databases can't keep up with the complexity and scale of such data, making it difficult to extract and perform analysis.
- Serverless vector databases – sophisticated architectures to handle the coast and scaling of intelligence.

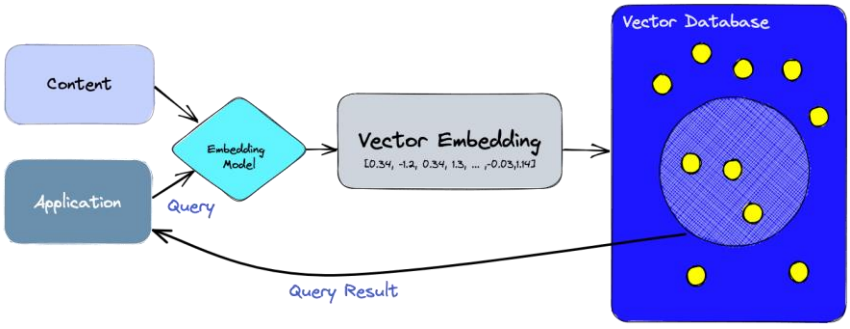

- Difference Between Vector Index and Vector Database

Feature	Vector Index (e.g., FAISS)	Vector Database (e.g., Pinecone, Chroma)
Purpose	Fast similarity search only	Full vector data storage, search, and management
Data Operations	Manual functions	Built-in functions
Metadata support	No support	Full support, with filtering
Scalability	Needs custom infra for scaling	Designed to scale
Real-time updates	Needs full indexing	Dynamic and real-time updates
Backup and Collections	Manually handles	Native backup and collection support
Ecosystem Integration	Limited integration	Easily integrates with LangChain, Spark, Tableau, etc.
Security & Access Control	Minimal features	Built-in auth, access control, and namespace-level multitenancy
Use Case	Experimental or small-scale tasks	Production-grade AI systems

- **Working:**
    - A vector database operates on vectors, so the way it's optimized and queried is quite different.
    - A similarity metric is applied to find a vector that is the most similar to our query.
    - A combination of different algorithms is used that all participate in Approximate Nearest Neighbor (ANN) search.
    - These algorithms are assembled into a pipeline that provides fast and accurate retrieval of the neighbors of a queried vector.
    - The more accurate the result, the slower the query will be.
    - A good system can provide ultra-fast search with near-perfect accuracy.

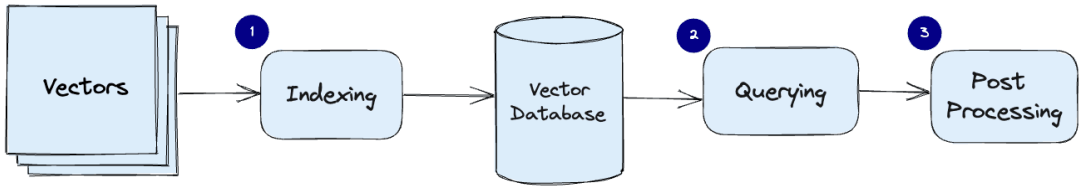

- Indexing:
    - This step maps the vectors to a data structure that will enable faster searching.
- Querying:
    - The vector database compares the indexed query vector to the indexed vectors in the dataset to find the nearest neighbors
- Post processing:
    - This step can include re-ranking the nearest neighbors using a different similarity measure.
- **Serverless Vector Databases: (very expensive)**

  Solves the following issues:

    - **Separation of storage from compute**: To optimize costs, compute should only be used when needed. That means decoupling the index storage from queries and searching *only* what is needed — this becomes increasingly difficult when involving latency.
    - **Multitenancy**: Handling namespaces in indexes to ensure infrequently queried namespaces do not increase costs.
    - **Freshness**: A vector DB needs to provide fresh data, meaning that within a few seconds of inserting new data, it is queryable.
- **Algorithms –**
    - The common goal is to enable fast querying by creating a data structure that can be traversed quickly.
    - They will commonly transform the representation of the original vector into compressed form to optimize the query process.
- **Random Projection –**
    - The idea is to project the high-dimensional vectors to a lower-dimensional space using a random projection matrix.

- **Product Quantization –**
    - It takes the original vector, breaks it up into smaller chunks, simplifies the representation of each chunk by creating a representative "code" for each chunk, and then puts all the chunks back together, without losing information that is vital for similarity operations.
- **Locality sensitive hashing –**
    - A technique for indexing in the context of an approximate nearest-neighbor search.
    - It is optimized for speed while still delivering an approximate, non-exhaustive result.
    - LSH maps similar vectors into "buckets" using a set of hashing functions

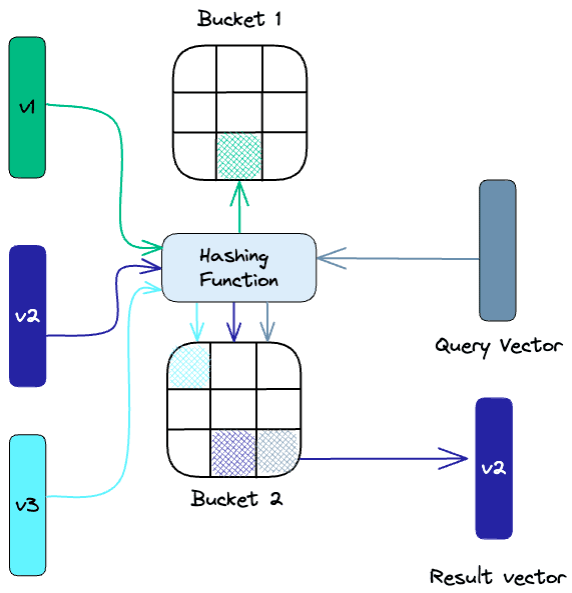

- Hierarchical Navigable Small World (HNSW) -
    - HNSW creates a hierarchical, tree-like structure where each node of the tree represents a set of vectors.
    - The edges between the nodes represent the similarity between the vectors.
- Similarity Measures –
    - Similarity measures are mathematical methods for determining how similar two vectors are in a vector space.
    - Similarity measures are used in vector databases to compare the vectors stored in the database and find the ones that are most similar to a given query vector.
    - Similarity measures are:
        - Cosine similarity
        - Euclidean distance
        - Dot product
- Filtering –
    - The vector database usually maintains two indexes: a vector index and a metadata index.
    - It then performs the metadata filtering either before or after the vector search itself, but in either case, there are difficulties that cause the query process to slow down.

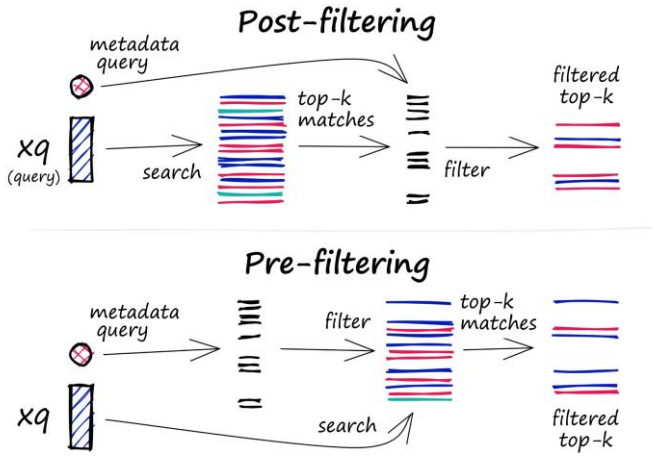

- Pre-filtering - metadata filtering is done before the vector search.
- Post-filtering - metadata filtering is done after the vector search.
- Database Operations - vector databases are equipped with a set of capabilities that makes them better qualified to be used in high scale production settings.
- Performance and Fault Tolerance -
    - The more data we have, the more nodes that are required - and the bigger chance for errors and failures.
    - To ensure both high performance and fault tolerance, vector databases use sharding and replication apply the following:
        - **Sharding** - partitioning the data across multiple nodes.
        - **Replication** - creating multiple copies of the data across different nodes.
- Monitoring - To effectively manage and maintain a vector database, we need a robust monitoring system that tracks the important aspects of the database's performance, health, and overall status.
- Access Control - the process of managing and regulating user access to data and resources.
- Backups and Collections –
    - When all else fails, vector databases offer the ability to rely on regularly created backups.
    - These backups can be stored on external storage systems or cloud-based storage services, ensuring the safety and recoverability of the data.
- API and SDKs
    - Developers who interact with the database want to do so with an easy-to-use API, using a toolset that is familiar and comfortable.
    - The vector database API layer simplifies the development of high-performance vector search applications.
    - Vector databases would often provide programming language specific SDKs that wrap the API.
    - The SDKs make it even easier for developers to interact with the database in their applications.
    - This allows developers to concentrate on their specific use cases, such as semantic text search, generative question-answering, hybrid search, image

similarity search, or product recommendations, without having to worry about the underlying infrastructure complexities.

- **Vector Embedding**
  - They are the central to many NLP, recommendation, and search algorithms.
  - Every single data can be turned into vectors for their easier operations.
  - This makes it possible to translate semantic similarity as perceived by humans to proximity in a vector space.
  - **Creating vector embeddings –**
    - To engineer the vector values using domain knowledge. – known as **feature engineering** and this is expensive to scale
    - Instead of engineering vector embeddings, we often train models to translate objects to vectors. A deep neural network is a common tool for training such models. The resulting embeddings are usually high dimensional (up to two thousand dimensions) and dense (all values are non-zero).
    - For text data, models such as Word2Vec, GLoVE, and BERT transform words, sentences, or paragraphs into vector embeddings.
    - Images can be embedded using models such as convolutional neural networks (CNNs), Examples of CNNs include VGG, and Inception.
    - Audio recordings can be transformed into vectors using image embedding transformations over the audio frequencies visual representation (e.g., using its Spectrogram).
  - **Using vector embeddings –**
    - Very useful for a wide range of ML applications.
    - Similarity search is one of the most popular uses of vector embeddings.
    - Even if we don't use embeddings directly for an application, many popular ML models and methods internally rely on them.